INSTALLATION MANUAL

IN-LINE FIBER MDU & FTTH DROP CABLE REPAIR SPLICE CLOSURE

GENERAL

This document will serve as a guidance for installation method of the product "IN-LINE FIBER MDU & FTTH DROP CABLE REPAIR SPLICE CLOSURE".

List of products that this manual covers:

- **FCLO-HO-01E-1-PFMS-3MM:** HORIZONTAL 1F, 1 MECH SPLICE PRELOADED 3MM.
- **FCLO-HO-01E-1-EMP-3MM:** HORIZONTAL 1F, EMPTY CONFIGURATION 3 MM.
- **FCLO-HO-01E-1-PSCA-3MM:** HORIZONTAL 1F , 1 SC/APC ADAPTER PREL 3 MM.
- **FCLO-HO-01E-1-PSCU-3MM:**HORIZONTAL 1F , 1 SC/UPC ADAPTER PREL 3 MM.

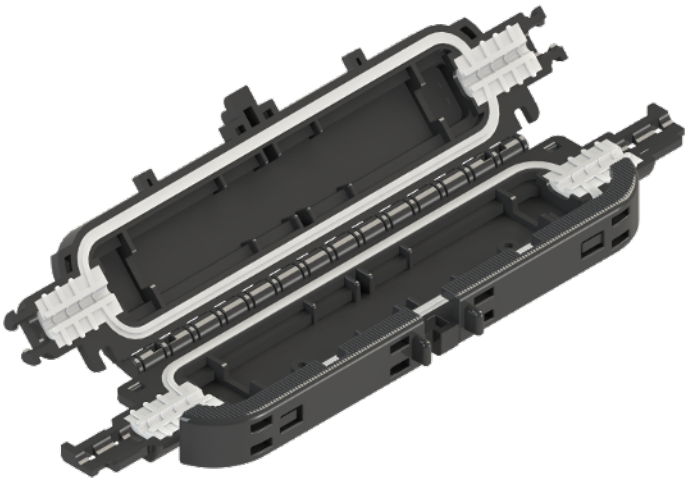

INSTALLATION MANUAL

IN-LINE FIBER MDU & FTTH DROP CABLE REPAIR SPLICE CLOSURE

INDEX

INSTALLATION MANUAL

IN-LINE FIBER MDU & FTTH DROP CABLE REPAIR SPLICE CLOSURE

The "IN-LINE FIBER MDU & FTTH DROP CABLE REPAIR SPLICE CLOSURE" by FUSIONGUARD® is preloaded with:

FCLO-HO-01E-1-PFMS-3MM			
NUMBER	CODE	DESCRIPTION	QTY
1	FCLO-HO-01E-3MM	HORIZONTAL 1F SPLICE CLOSURE 3 MM	1
2	EQ-10025BK	BLACK NYLON ZIP TIES UV RESISTANT	8
3	FCLO-CV-20MM	VULCANIZING TAPE 20 MM X 20 MM X 2 MM	1
4	SG-5G	SILICONE GREASE BAG 5 GR	1
5	L925B-KIT	MECHANICAL SPLICE KIT	1
6	FCLO-HO-01E-WKIT	WALL MOUNTING KIT SPLICE CLOSURE	1

With our kit, any drop cable can be repaired quicker and easier than a complete last mile installation replacement.

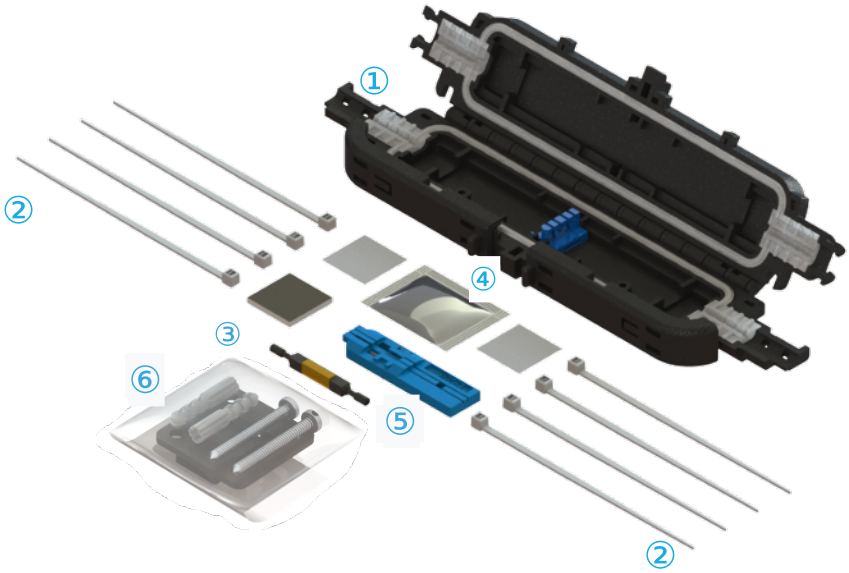

INSTALLATION MANUAL

IN-LINE FIBER MDU & FTTH DROP CABLE REPAIR SPLICE CLOSURE

The "IN-LINE FIBER MDU & FTTH DROP CABLE REPAIR SPLICE CLOSURE" by FUSIONGUARD® is preloaded with:

FCLO-HO-01E-1-EMP-3MM			
NUMBER	CODE	DESCRIPTION	QTY
1	FCLO-HO-01E-3MM	HORIZONTAL 1F SPLICE CLOSURE 3 MM	1
2	EQ-10025BK	BLACK NYLON ZIP TIES UV RESISTANT	8
3	FCLO-CV-20MM	VULCANIZING TAPE 20 MM X 20 MM X 2 MM	2
4	SG-5G	SILICONE GREASE BAG 5 GR	1
5	FCLO-HO-01E-WKIT	WALL MOUNTING KIT SPLICE CLOSURE	1

With our kit, any drop cable can be repaired quicker and easier than a complete last mile installation replacement.

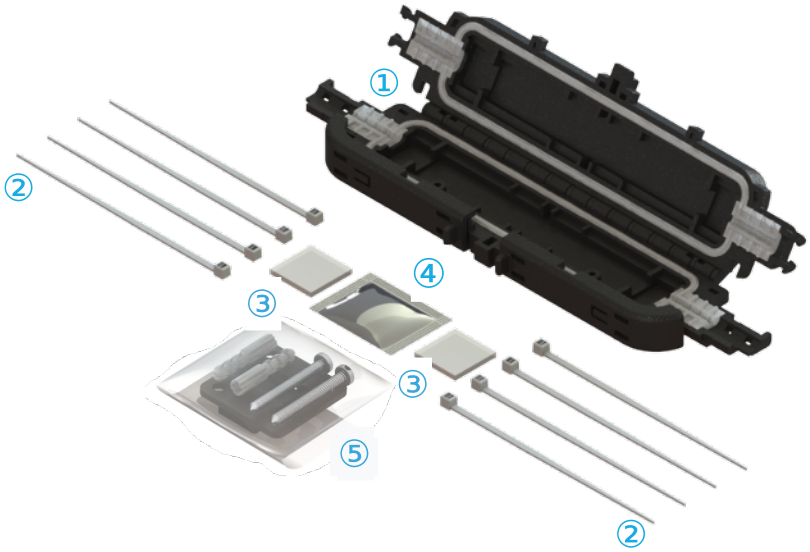

INSTALLATION MANUAL

IN-LINE FIBER MDU & FTTH DROP CABLE REPAIR SPLICE CLOSURE

The "IN-LINE FIBER MDU & FTTH DROP CABLE REPAIR SPLICE CLOSURE" by FUSIONGUARD® is preloaded with:

FCLO-HO-01E-1-EMP-3MM			
NUMBER	CODE	DESCRIPTION	QTY
1	FCLO-HO-01E-3MM	HORIZONTAL 1F SPLICE CLOSURE 3 MM	1
2	EQ-10025BK	BLACK NYLON ZIP TIES UV RESISTANT	8
3	FCLO-CV-20MM	VULCANIZING TAPE 20 MM X 20 MM X 2 MM	1
4	SG-5G	SILICONE GREASE BAG 5 GR	8
5	FCLO-HO-01E-WKIT	WALL MOUNTING KIT SPLICE CLOSURE	1
6	FA-SCA-A-S	SM SIMPLEX SC/APC ADAPTER	1

With our kit, any drop cable can be repaired quicker and easier than a complete last mile installation replacement.

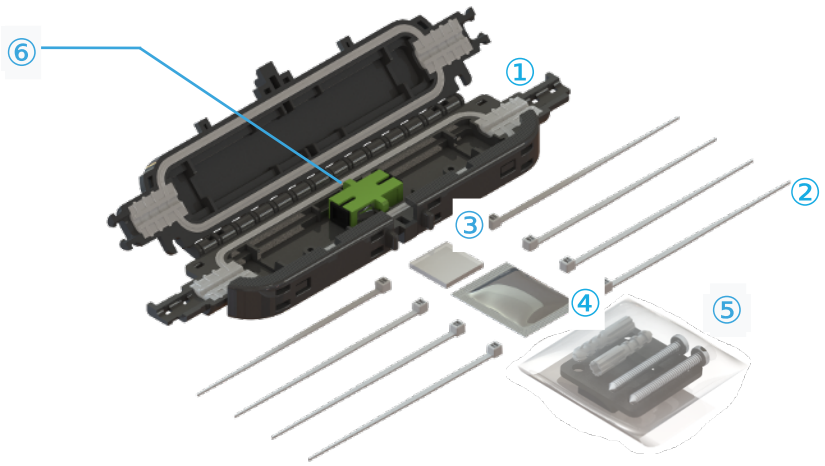

②

INSTALLATION MANUAL

IN-LINE FIBER MDU & FTTH DROP CABLE REPAIR SPLICE CLOSURE

The "IN-LINE FIBER MDU & FTTH DROP CABLE REPAIR SPLICE CLOSURE" by FUSIONGUARD® is preloaded with:

FCLO-HO-01E-1-EMP-3MM			
NUMBER	CODE	DESCRIPTION	QTY
1	FCLO-HO-01E-3MM	HORIZONTAL 1F SPLICE CLOSURE 3 MM	1
2	EQ-10025BK	BLACK NYLON ZIP TIES UV RESISTANT	8
3	FCLO-CV-20MM	VULCANIZING TAPE 20 MM X 20 MM X 2 MM	2
4	SG-5G	SILICONE GREASE BAG 5 GR	8
5	FCLO-HO-01E-WKIT	WALL MOUNTING KIT SPLICE CLOSURE	1
6	FA-SC-A-S	SM SIMPLEX SC/UPC ADAPTER	1

With our kit, any drop cable can be repaired quicker and easier than a complete last mile installation replacement.

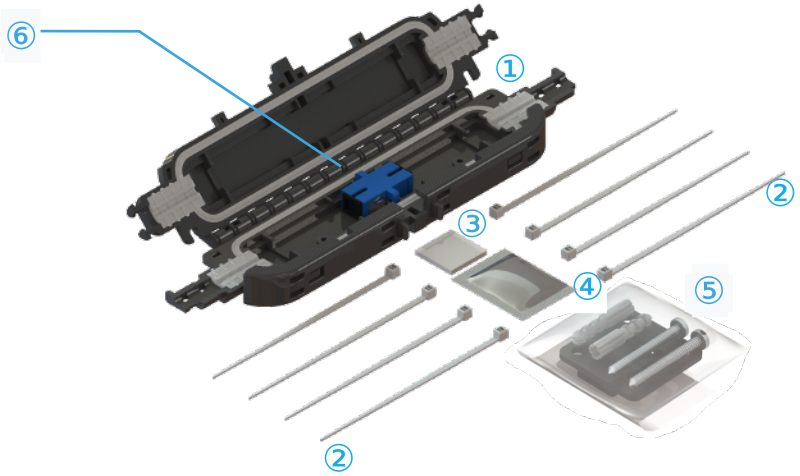

PFMS CONFIGURATION

STEP 1: CABLE´S PREPARATION FOR SPLICING PROCESS (PFMS FOR MDU)

1.1 Make sure you have the right cable to follow the steps. In this case, use **MDU Cable** as it shown.

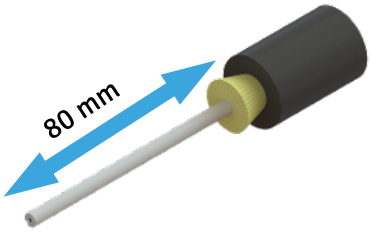

1.2 Use miller 900 um clamp to strip MDU fiber coating.

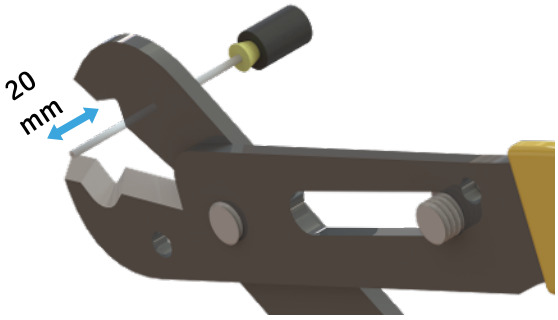

1.3 Check and clean the bare fiber with the dust free paper (Included).

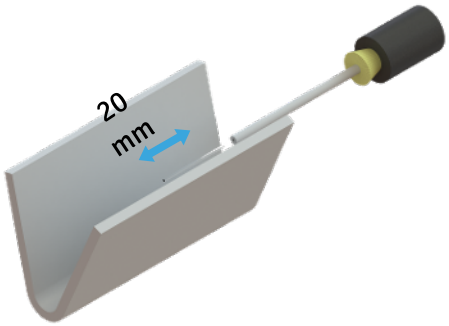

1.4 Place fiber into the cutting jig (Included) as it shown. (For 900 um)*.

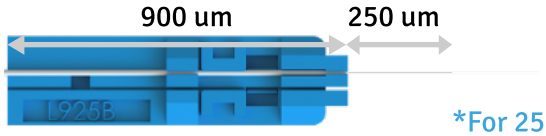

*For 250 um fiber go to page 11.

1.5 Place the cutting jig into the fiber cleaver and make the cutting.

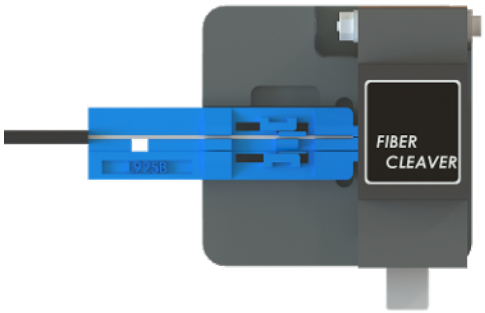

1.6 Now that the bare fiber is cut, from the 900 um optical fiber end is inserted into the mechanical splice end and repeat in both sides.

1

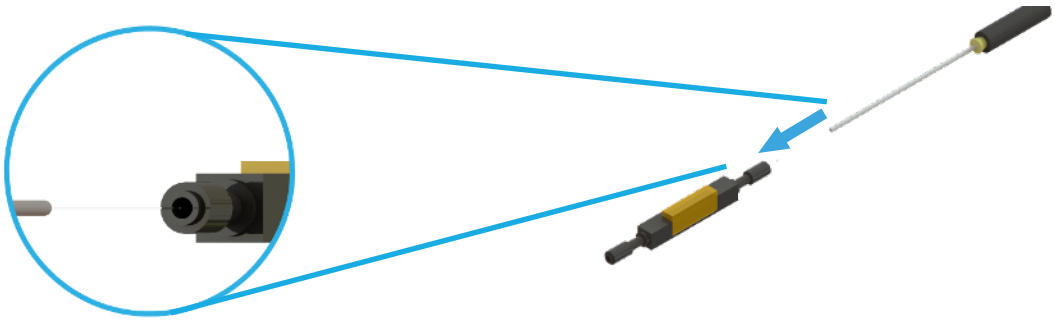

RESULT

2

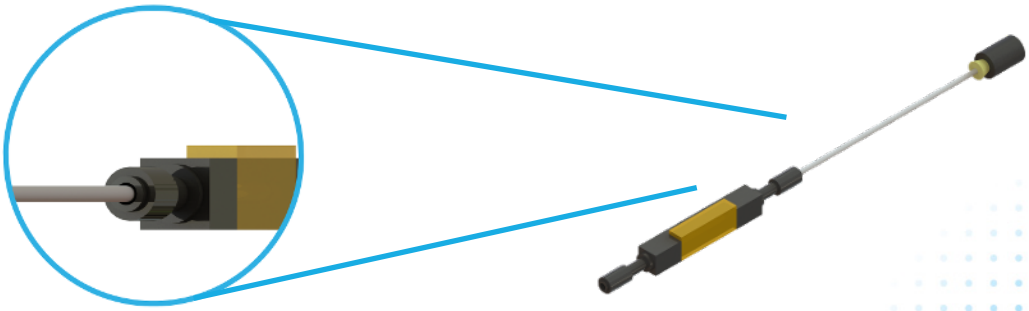

1.7 Insert the tight buffer confirming that it is fully inserted. Refer to the following images:

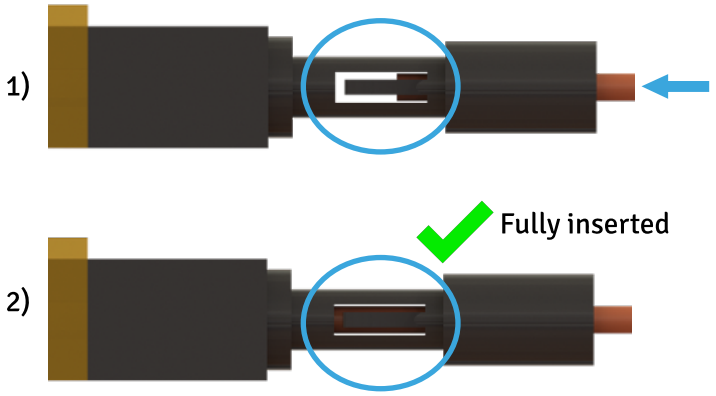

1.8 Once the fiber is into the mechanical splice, scroll the 900 um holder until it stops as it shown in the next image.

RESULT

1.9 Press the yellow part until it stops to splice the fibers and to finish this process.

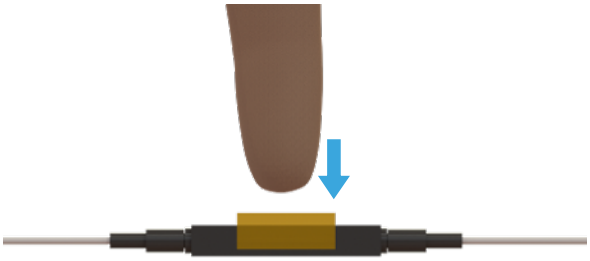

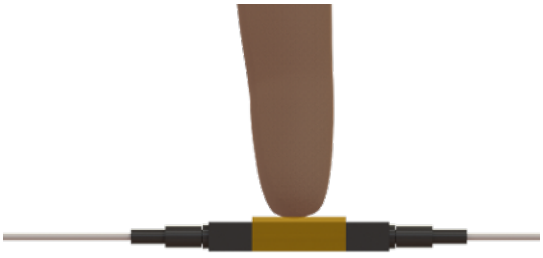

RESULT

STEP 1: CABLE´S PREPARATION FOR SPLICING PROCESS (PFMS FOR FTTH)

1.1 Make sure you have the right cable to follow the steps. In this case, use **FTTH Cable.**

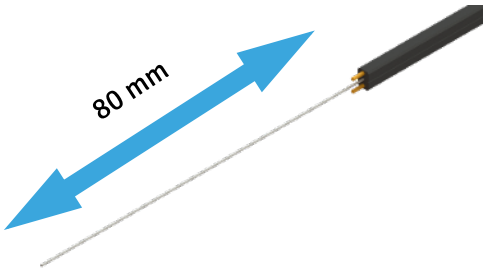

1.2 Use miller 250 um clamp to strip FTTH fiber coating.

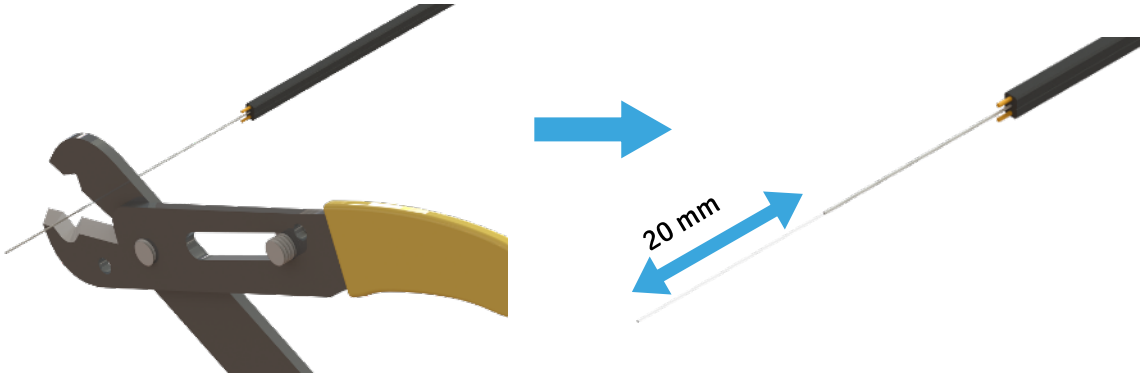

1.3 Check and clean the bare fiber with the dust free paper (Included).

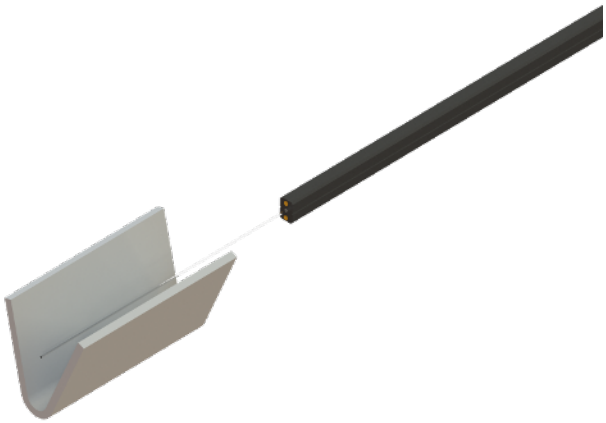

For 250 um fiber*

1.4 Place fiber into the cutting jig (Included) as it shown. (For 250 um).

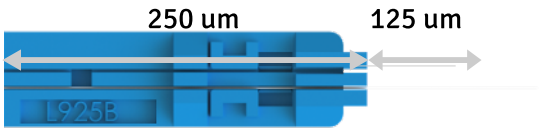

1.5 Place the cutting jig into the fiber cleaver and make the cutting.

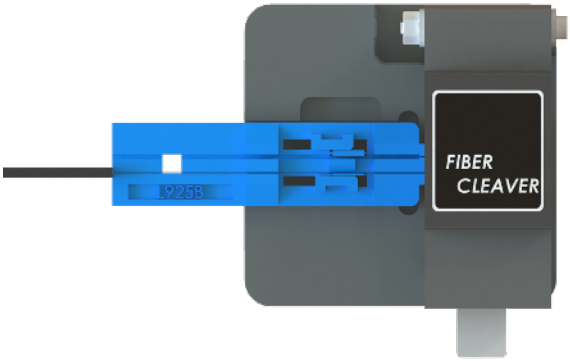

1.6 Now that the bare fiber is cut, from the 250 um optical fiber end is inserted into the mechanical splice end. First introduce the 250 um sleeves into the mechanical splice in both sides.

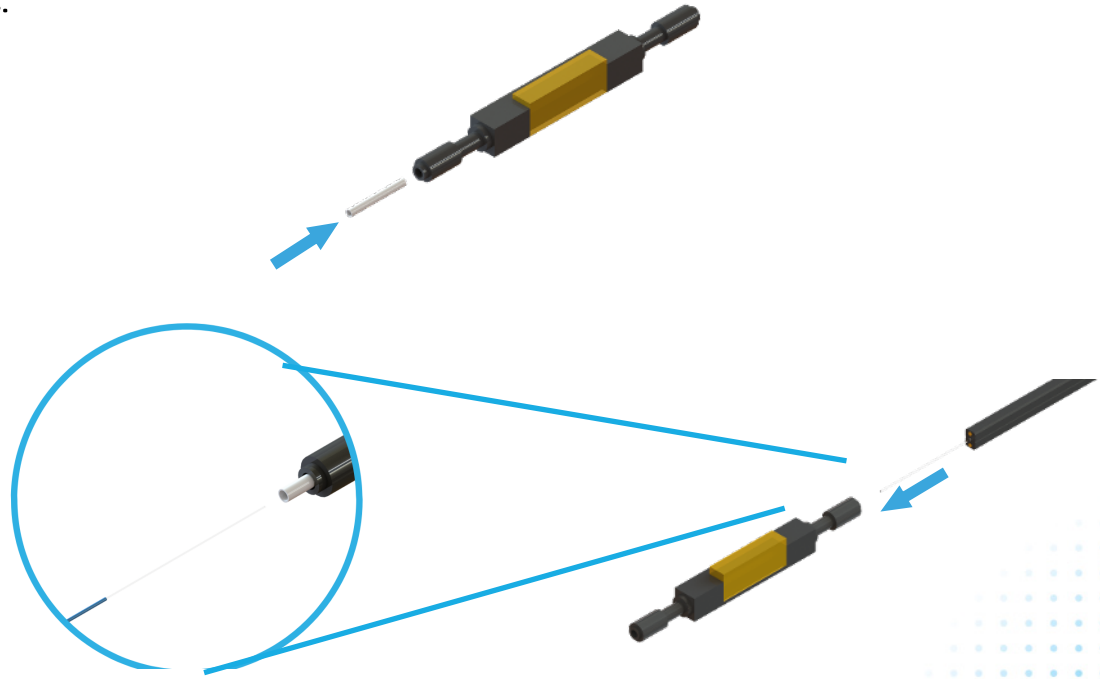

1.7 Once the fiber is into the mechanical splice, scroll the 250 um lockers until it stops as it shown in the next image.

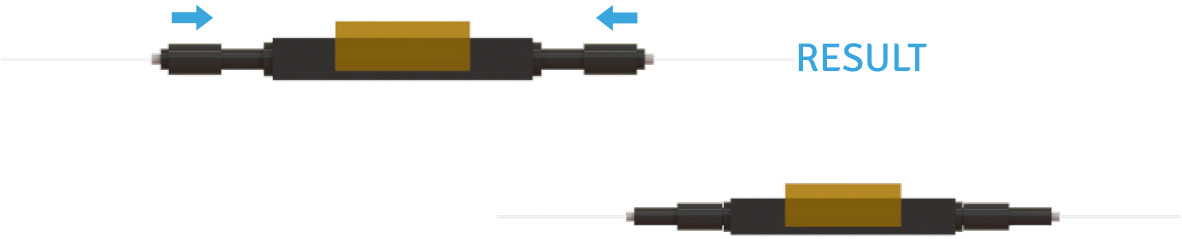

1.8 Press the yellow part until it stops to splice the fibers and to finish this process.

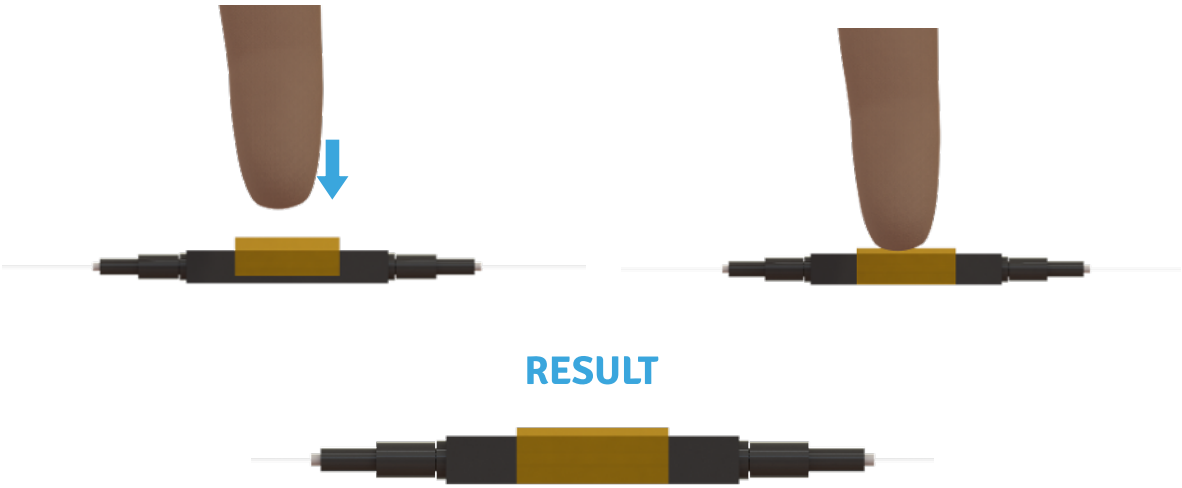

STEP 2: MECHANICAL SPLICE ARRANGEMENT (FOR MDU AND FTTH CABLE)

2.1 Begin by opening the **splice closure**, applying enough force on the hinges using a screwdriver.

As a reference, open it as shown in the next picture:

RIGHT SIDE

①

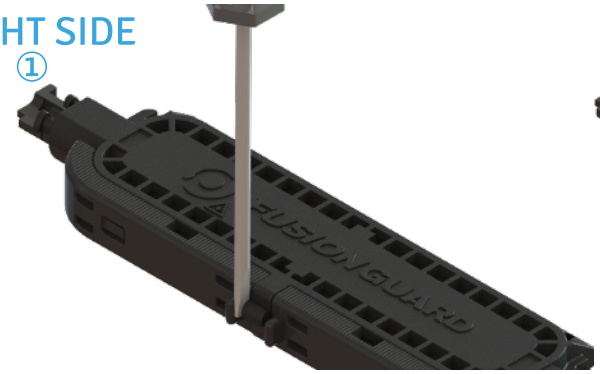

②

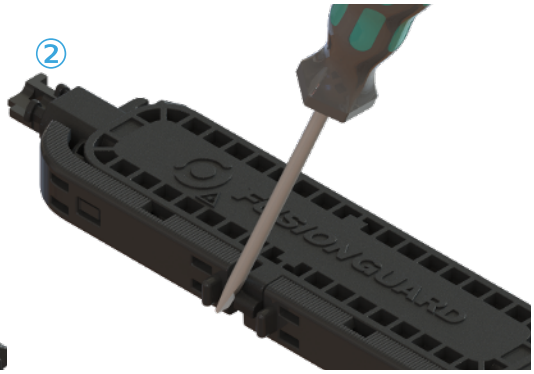

LEFT SIDE

①

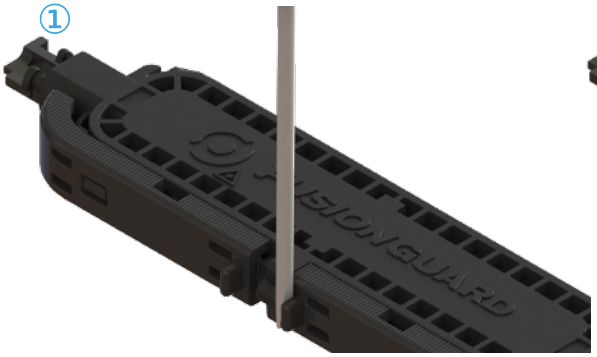

②

Opened splice closure

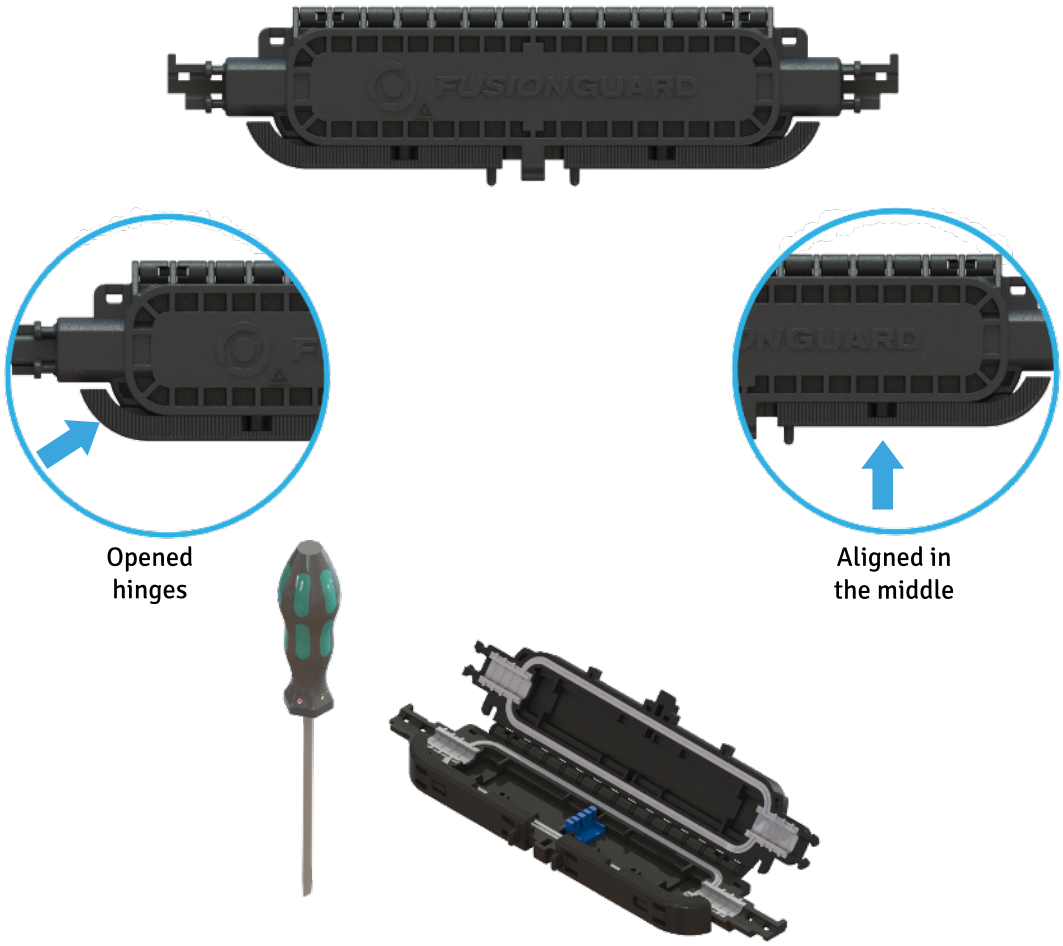

2.2 Place the cable and apply just **one** zip tie as shown to keep the cable properly placed as it shown. (Black zip ties will be shown white only for demonstrative purpose). Repeat on the other side.

Cut off the surplus.

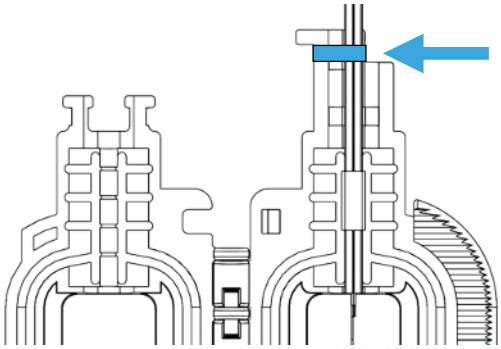

2.3 Once the splice closure is opened, the next step will be holding the cable in place for better mechanical splice arrangement and placing the mechanical splice in the holder as it shown in the next image.

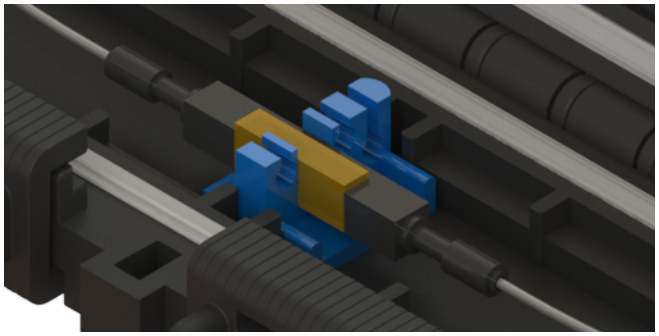

Result:

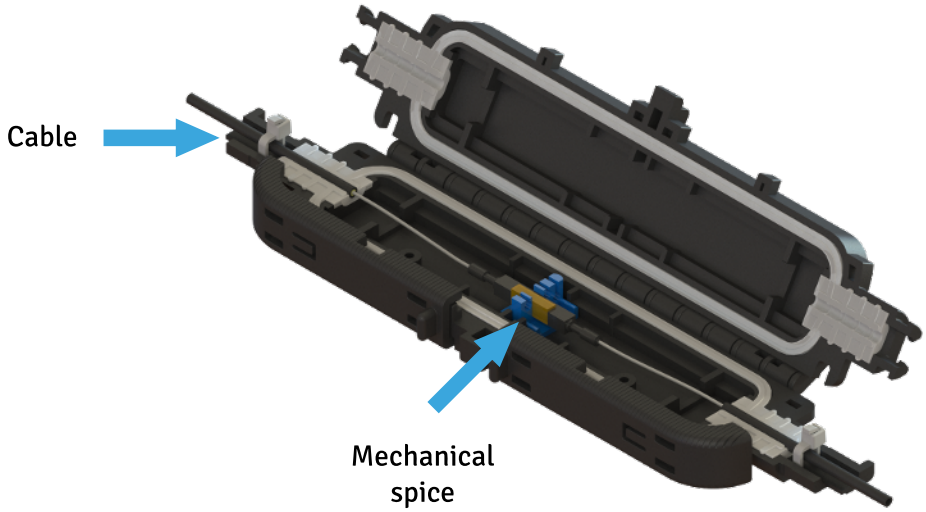

2.4 Once the cable is placed, apply vulcanized tape to the cable **on both** sides in order to completely seal the entry.

Apply the vulcanized tape to the grommets top to the grommets buttom as it shown.
(Half of one a piece vulcanized tape (Included)).

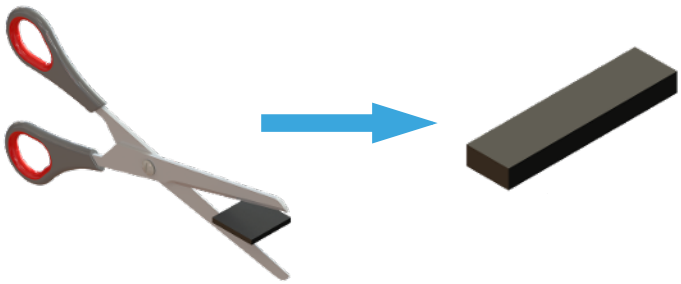

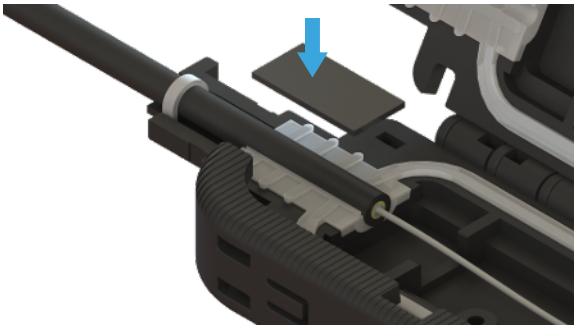

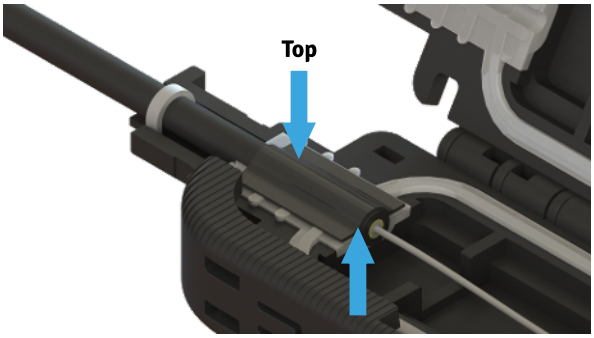

Result:

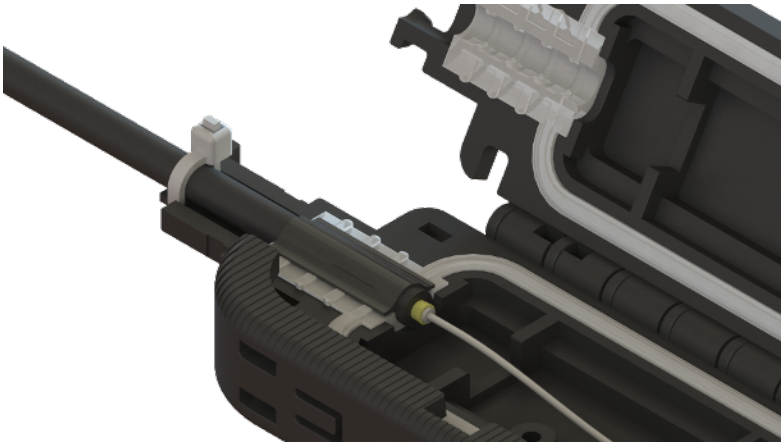

2.5 Next, apply the zip ties one on each side as it was shown **before closing the splice closure**. Cut off the surplus.

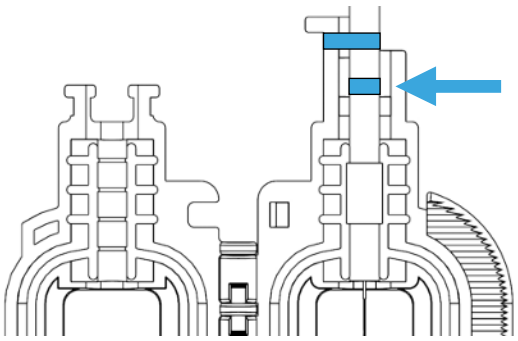

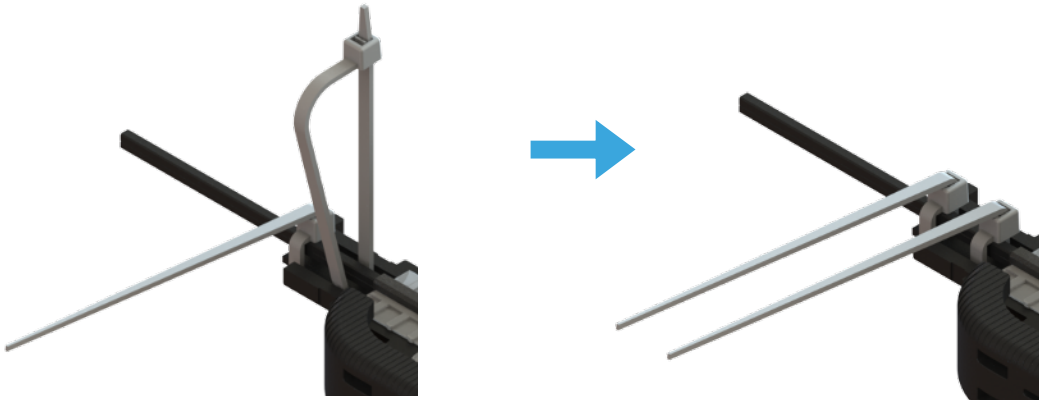

Result:

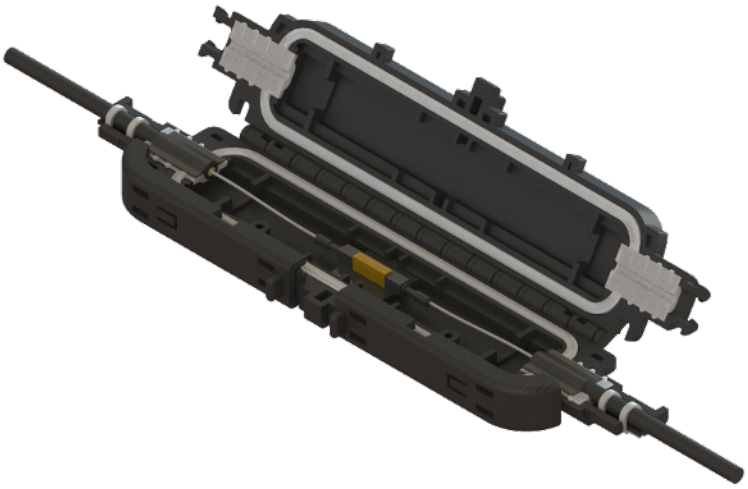

Note: Be careful that the splice is correctly located inside the in line splice closure before closing it as it shown in the image.

2.6 Open the silicone grease bag and add it over all the grommet as it shown.

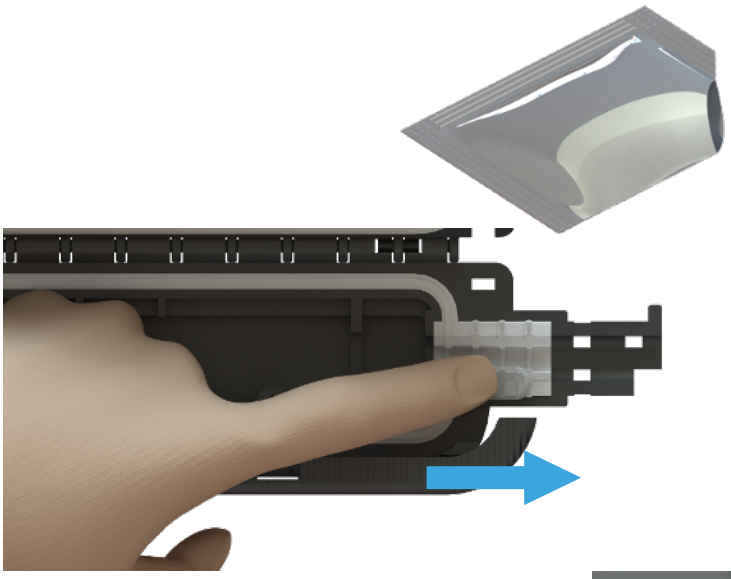

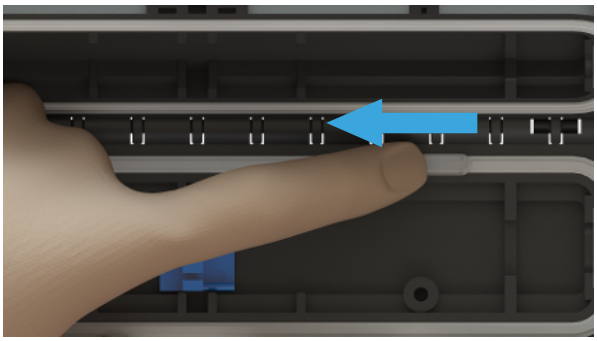

2.7 Proceed by closing the splice closure, placing the base and top together, and pushing the hinges.

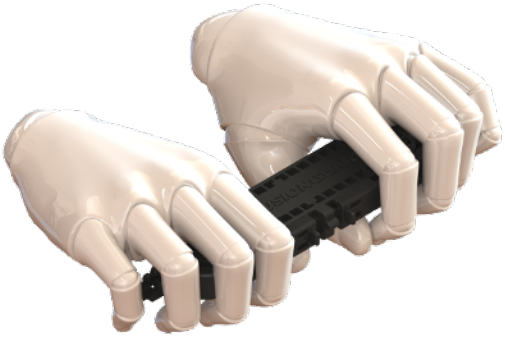

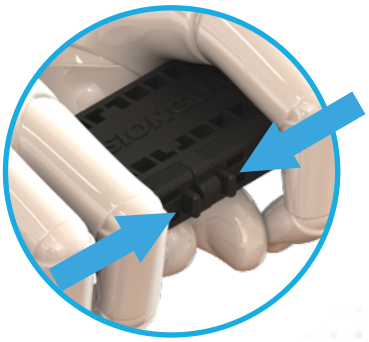

Closed splice closure

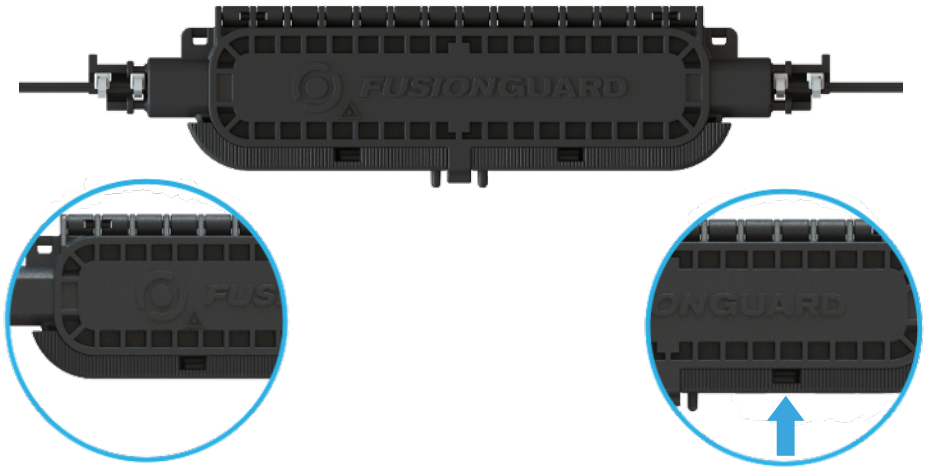

Closed hinges

Not visible mark

STEP 3. LAST ZIP TIES

3.1 Apply two more zip ties, **one on each side** as shown. This will help by applying force on the sides.

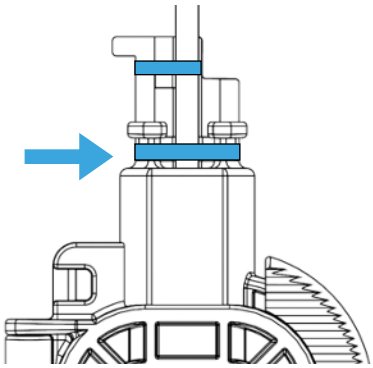

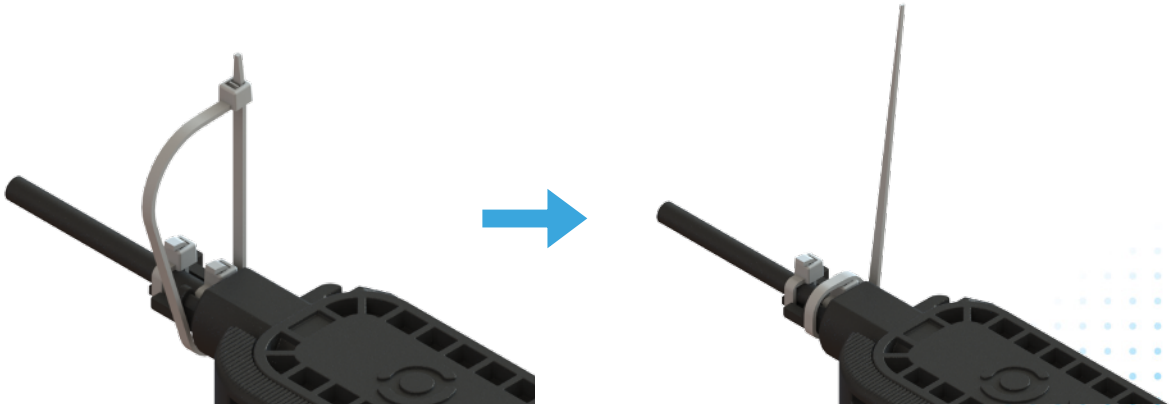

Result:

EMP CONFIGURATION

IN LINE TERMINAL SPLICE CLOSURE is suitable for any mechanical splice closure that accomplish the next measures:

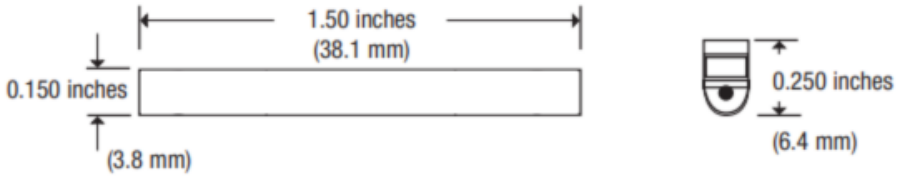

1.1 In each closure is included 2 pieces of vulcanized tape.

Cut the vulcanized tape into 2 parts and add a half to the mechanical splice.

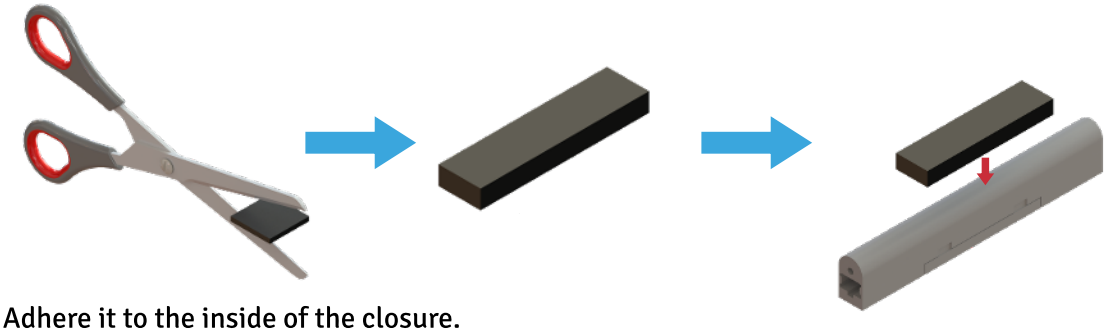

1.2 Adhere it to the inside of the closure.

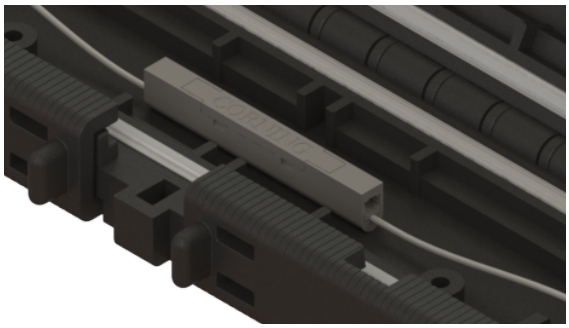

1.3 Go to step VULCANIZED TAPE AND ZIP TIES to place the mechanical splice into the closure.

RESULT

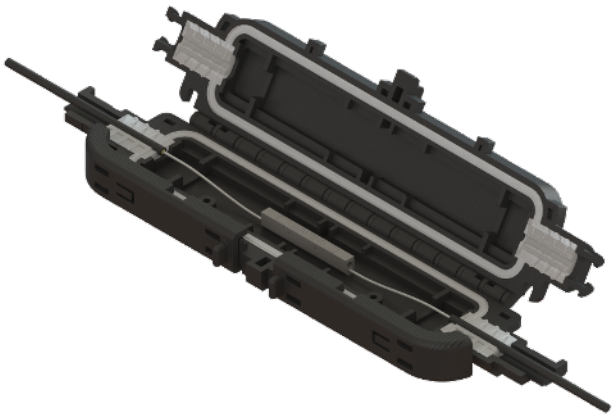

APC / UPC CONFIGURATION

FCLO-HO-01E-1-PSCA-3MM: SC/APC ADAPTER KIT.

FCLO-HO-01E-1-PSCU-3MM: SC/UPC ADAPTER KIT.

STEP 1: SCU/SCA ADAPTER´S PLACEMENT

1.1 Begin by opening the splice closure.

1.2 Once the splice closure is opened, the next step will be holding the adapters in the case as shown.

1.3 Put the adapter and remove the caps in its sides.

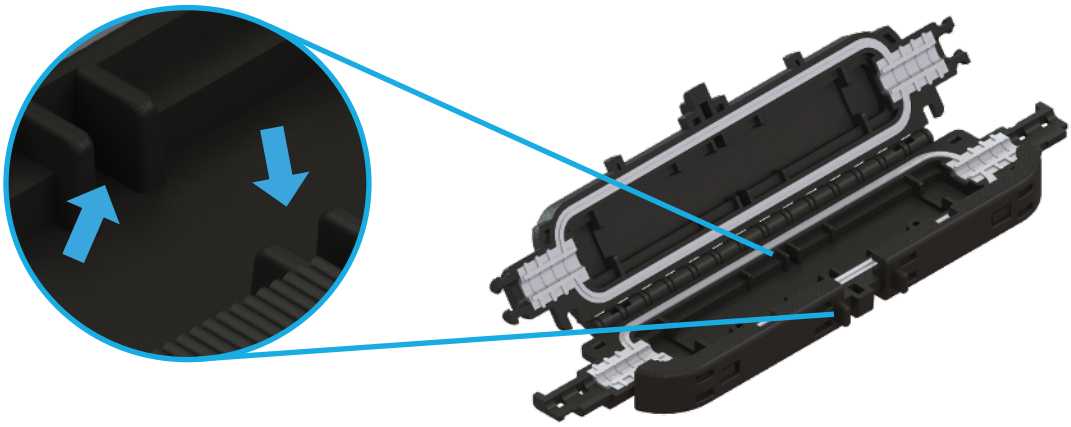

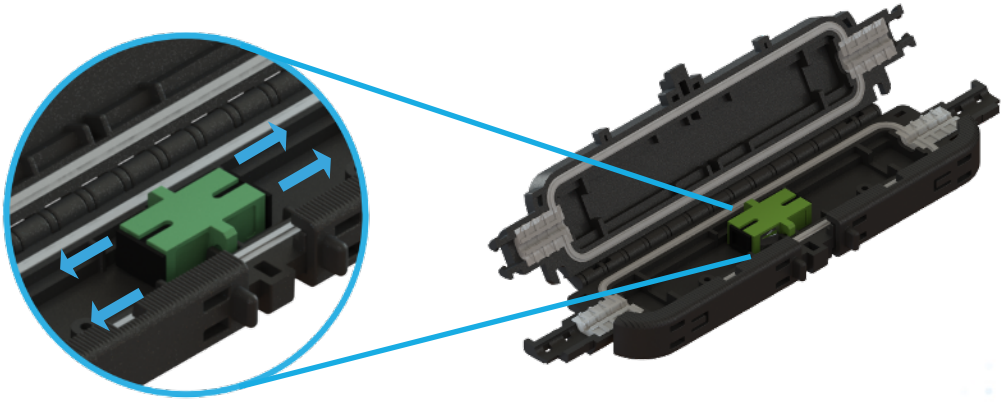

STEP 2: FIELD CONNECTOR

2.1 Insert the field connector into the adapter until it it stops.

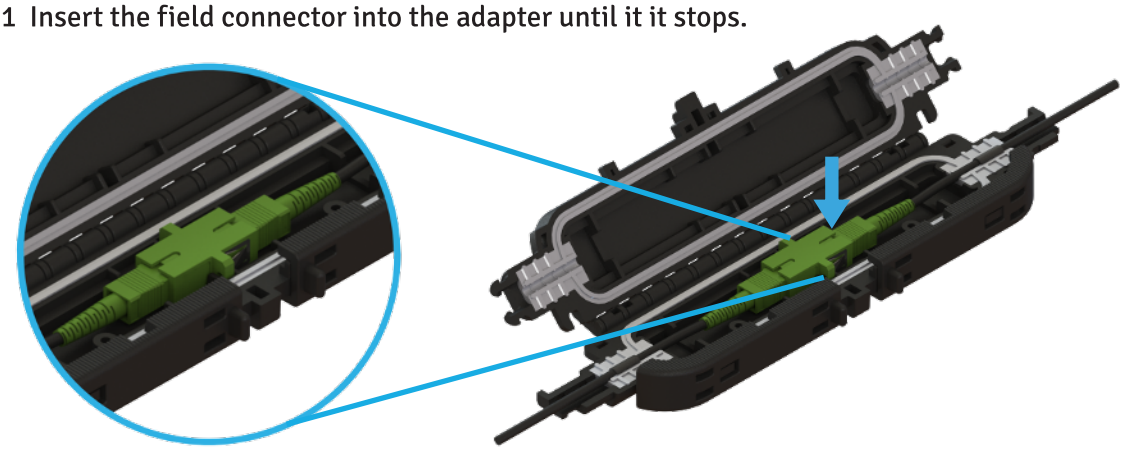

2.2 Once the cable is placed, apply vulcanized tape to the cable **on both** sides in order to completely seal the entry.

Result:

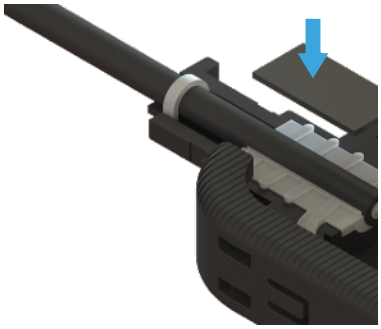

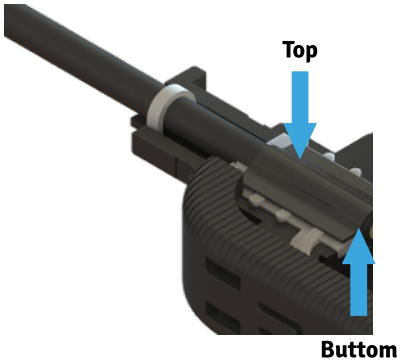

2.3 Repeat the steps as mentioned in the section: Step 3. Vulcanized tape and zip ties, page 14 to secure the cable with zip ties.

Result:

AERIAL INSTALLATION

Use a metallic messenger wire already installed:

Two zip ties should remain after the closure sealing. Use them to hang the closure over a messenger wire.

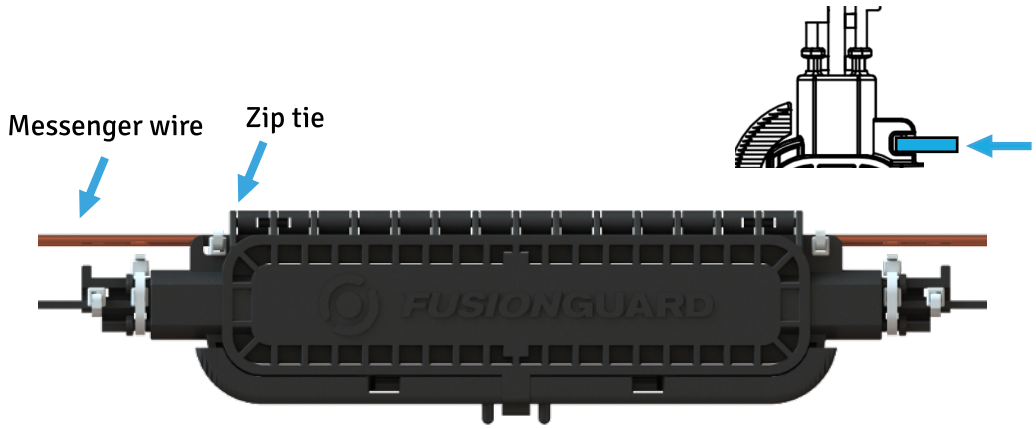

WALL INSTALLATION

Wall mount installation requires the kit: FCLO-HO-01E-WKIT. This kit is included in each configuration.

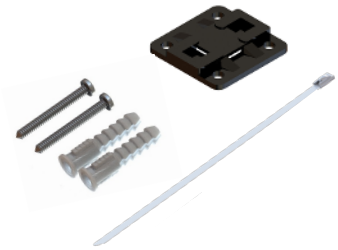

FCLO-HO-01E-WKIT

FCLO-HO-01E-WKIT		
CT-13604	8"X.18" STAINLESS STEEL CABLE TIE	1
1131314	#8 X 1 1/2" ZINC PAN PHILLIPS SHEET METAL SCREW	2
5014-PE-0000-006	CLOSURE MOUNTING BASE FCLO 1	1
PEB8-38	WHITE #8 X 37.5MM WALL ANCHOR	2
Note: Installation tools are not included		

We begin the installation by inserting the wall anchors in their place. Use a 7.5 mm drill bit to drill into the wall. These anchors will fix the mounting base on the wall.

Place them and the screws in diagonal as it shown in the next image. Be careful to keep the horizontal leveled.

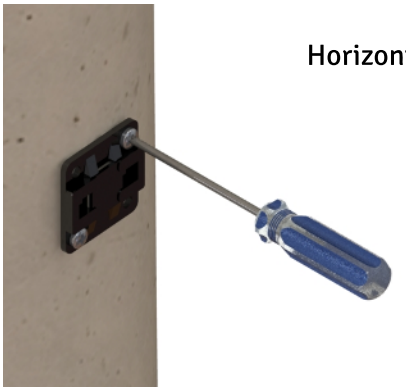

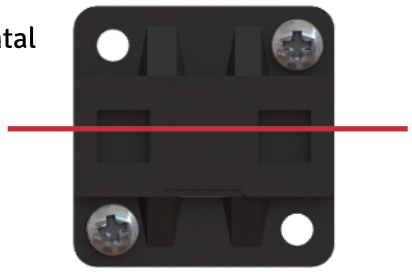

Next, insert the metal cable tie through the wall base, as shown.The mounting base has two extrusions that serve as insertion points for the repair splice closure:

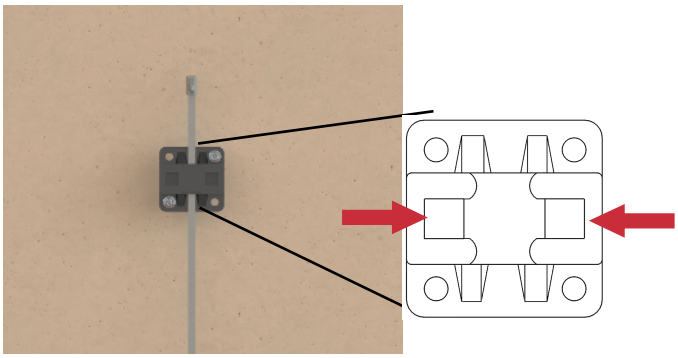

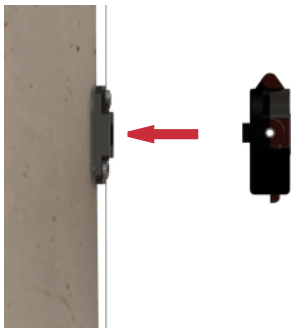

Finally, secure your installation by applying tension to the metal cable tie. Cut the excess of the metal cable tie.

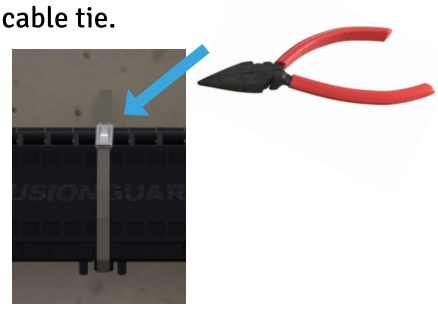

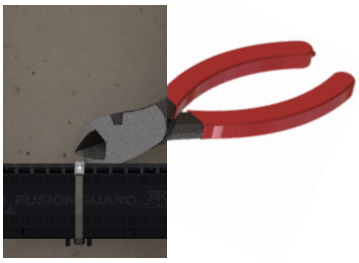

Result:

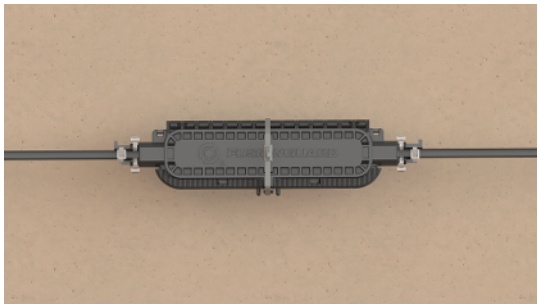

HINGES POSITION

In case of that the splice hinges slips out of place as shown, it can be returned to its place.

1) Insert the hinge into the closure as in the next image:

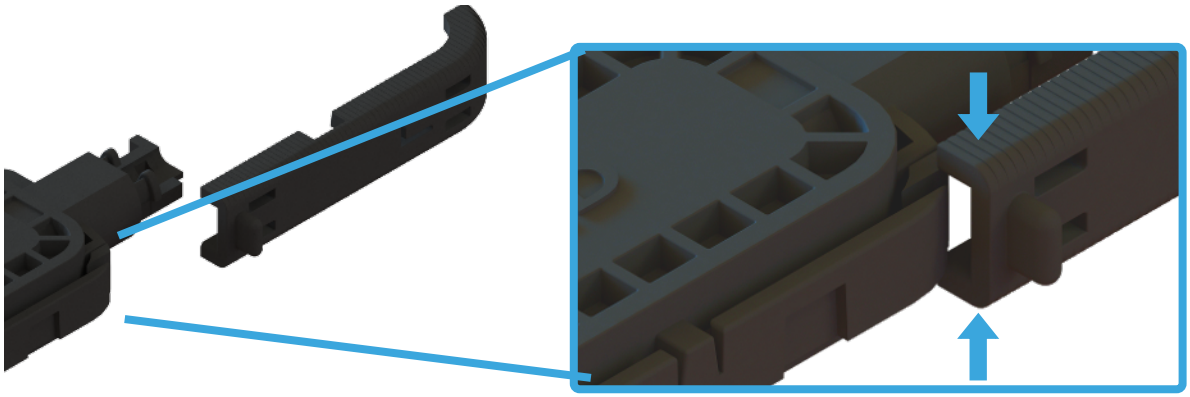

2) Once in its place, move it over the body of the closure as shown in the following image.

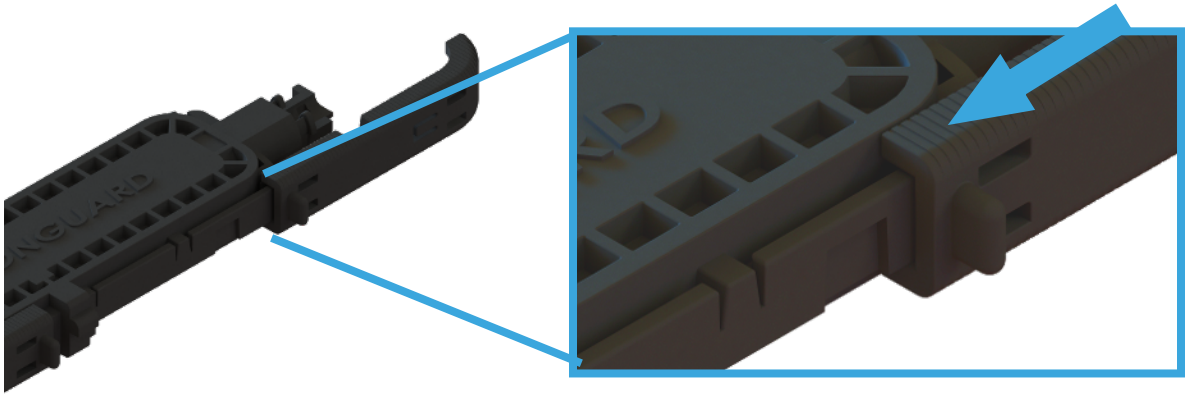

3) Once in its place, move it over the body of the closure as shown in the following image.